PROJECT 41: Design and Analysis of S-Parameters of Two-Port Network by using Cadence Virtuoso

A Comprehensive Study of Analog Circuits

By: Priya Chaudhary, Astitva Johri and Bhavya Solanki

Chapters:

List of Figures……..…… 3

1. Introduction …….. 4
2. Brief Description…… 5
3. Circuit Design……. 6-7
   3.1 Schematic Design……... 6
   3.2 Simulation Setup...…….. 6
   3.3 S-Parameter Analysis…….…. 7
4. Simulation Results…….. 8
5. Advantages and Disadvantages…….. 9
   5.1 Advantages……. 9
   5.2 Disadvantages……. 9
6. Conclusion…….. 10
7. Frequently Asked Questions (FAQs)…….. 11

LIST OF FIGURES

Figure 3.1 Circuit of Two-Port Network ……..……..7

Figure 4.1 Simulation Results of Two-Port Network (Real Analysis) ……...…..8

Figure 4.2 Simulation Results of Two-Port Network (Imaginary Analysis) …….……...…..8

1. INTRODUCTION

S-parameters (Scattering parameters) play a crucial role in characterizing electrical networks, particularly in high-frequency applications such as RF and microwave circuits. These parameters define how electrical signals interact with a two-port network in terms of reflection and transmission, making them essential in network analysis and design. Unlike traditional circuit parameters like impedance and admittance, S-parameters allow engineers to analyze networks efficiently in the frequency domain, where direct impedance measurements become challenging.
In modern electronic design, simulation tools like Cadence Virtuoso are used to evaluate and optimize S-parameters with high accuracy. Cadence Virtuoso enables circuit designers to simulate the response of networks to different input frequencies, helping in the optimization of impedance matching, minimizing signal reflection, and ensuring proper signal propagation through the system. The real and imaginary components of S-parameters are of particular importance, as they provide insights into both magnitude and phase information, which are crucial for understanding the behavior of high-frequency circuits.

This document explores the methodology for designing and analyzing the real and imaginary components of S-parameters in a two-port network using Cadence Virtuoso. The discussion covers the fundamental principles, advantages, limitations, and practical applications of S-parameter analysis, providing a comprehensive guide for circuit designers and researchers working with high-frequency networks.

2. BRIEF DESCRIPTION

S-parameters are essential in evaluating the performance of two-port networks, particularly in RF and high-frequency applications. They describe the response of an electrical network to an input signal by defining how much of the signal is reflected and how much is transmitted through the network. The two-port network can include amplifiers, filters, transmission lines, and antennas, among other components.

The real and imaginary parts of S-parameters provide deeper insights into the circuit's behavior. The real part indicates the resistive losses, while the imaginary part corresponds to the reactive elements like inductors and capacitors that affect phase shifts and signal integrity. Understanding both components is critical for effective impedance matching, gain optimization, and noise reduction in electronic circuits.

Cadence Virtuoso provides an intuitive and efficient environment for S-parameter analysis. It allows designers to:

- Set up a two-port network and define the required simulation conditions.
- Apply AC and frequency-domain analyses to determine S-parameters.
- Extract real and imaginary components for each parameter (S11, S21, S12, and S22).
- Optimize circuit performance based on simulation results.

By leveraging these features, engineers can analyze how a circuit behaves at different frequencies and adjust design parameters accordingly. This results in improved efficiency, minimized power loss, and enhanced signal transmission in high-frequency systems.

3. CIRCUIT DESIGN

3.1 Schematic Design

1. **Create a New Schematic:** Open Cadence Virtuoso and create a new schematic for the two-port network.
2. **Add Components:** Place essential components such as resistors, capacitors, inductors, and transmission lines. For active circuits, include transistors or amplifiers.
3. **Define Ports:** Assign input and output ports to specify excitation and termination conditions for S-parameter analysis.
4. **Connect the Circuit:** Wire up all the components ensuring a proper signal path.
5. **Set Parameter Values:** Define values for each component based on design requirements.

3.2 Simulation Setup

1. **Select Simulation Environment:** Use the Cadence SpectreRF or S-Parameter analysis tool.
2. **Define Frequency Sweep:** Set the frequency range for analysis, covering the required operating spectrum.
3. **Assign Excitation Signals:** Configure power levels and impedance for input signals.
4. **Configure Simulation Options:** Set accuracy levels and convergence criteria for precise results.
5. **Run the Simulation:** Execute the simulation and analyze the results.

3.3 S-Parameter Analysis

1. **Extract S-Parameters:** Obtain S11, S21, S12, and S22 values.
2. **Analyze Real and Imaginary Components:**
   - **Real Part:** Represents resistance and power dissipation.
   - **Imaginary Part:** Indicates reactance and phase shifts.
3. **Plot Frequency Response:** Observe variations of S-parameters over the frequency range.
4. **Optimize Circuit Performance:** Adjust component values to improve network efficiency.

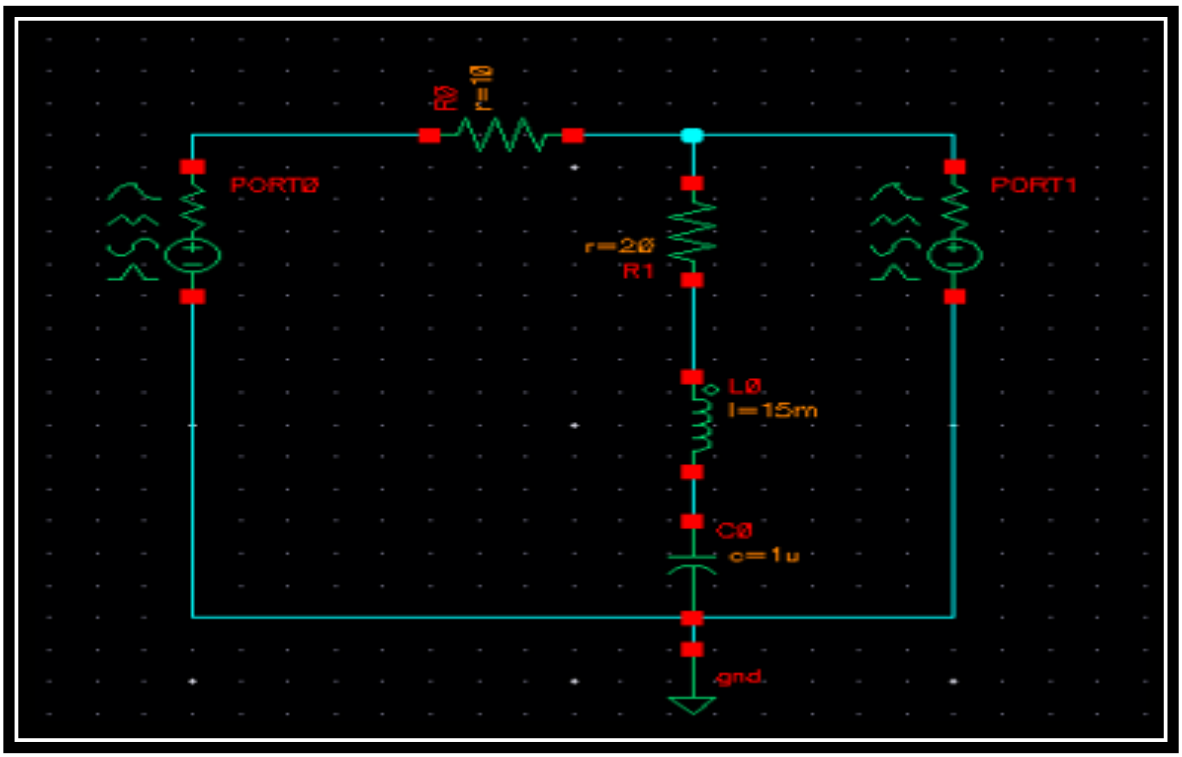

Figure 3.1 Circuit of Two-Port Network

4. SIMULATION RESULTS

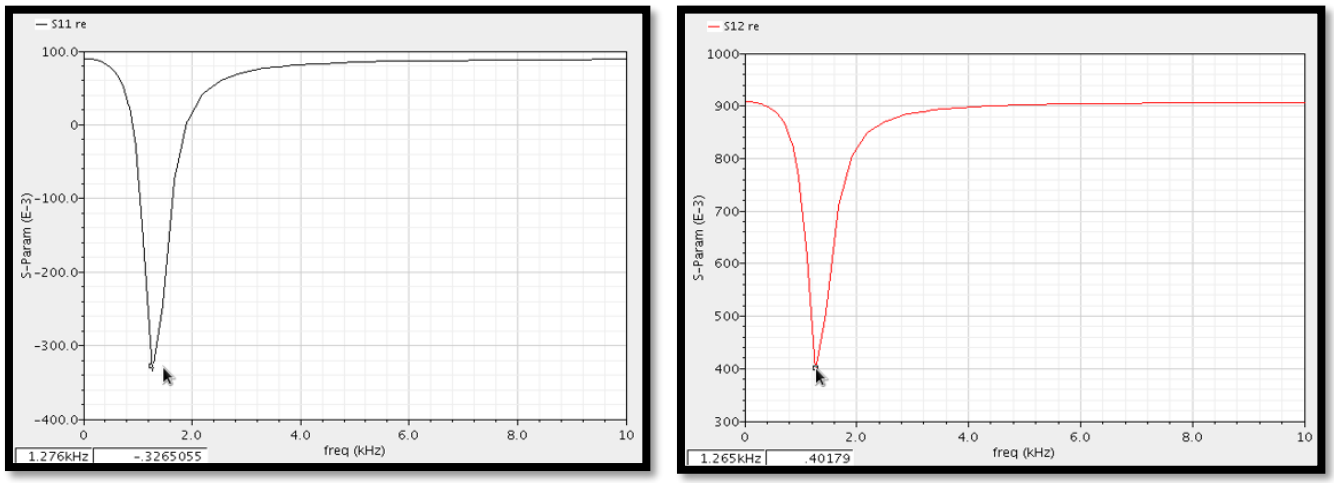

Figure 4.1: Simulation Results of Two-Port Network (Real Analysis)

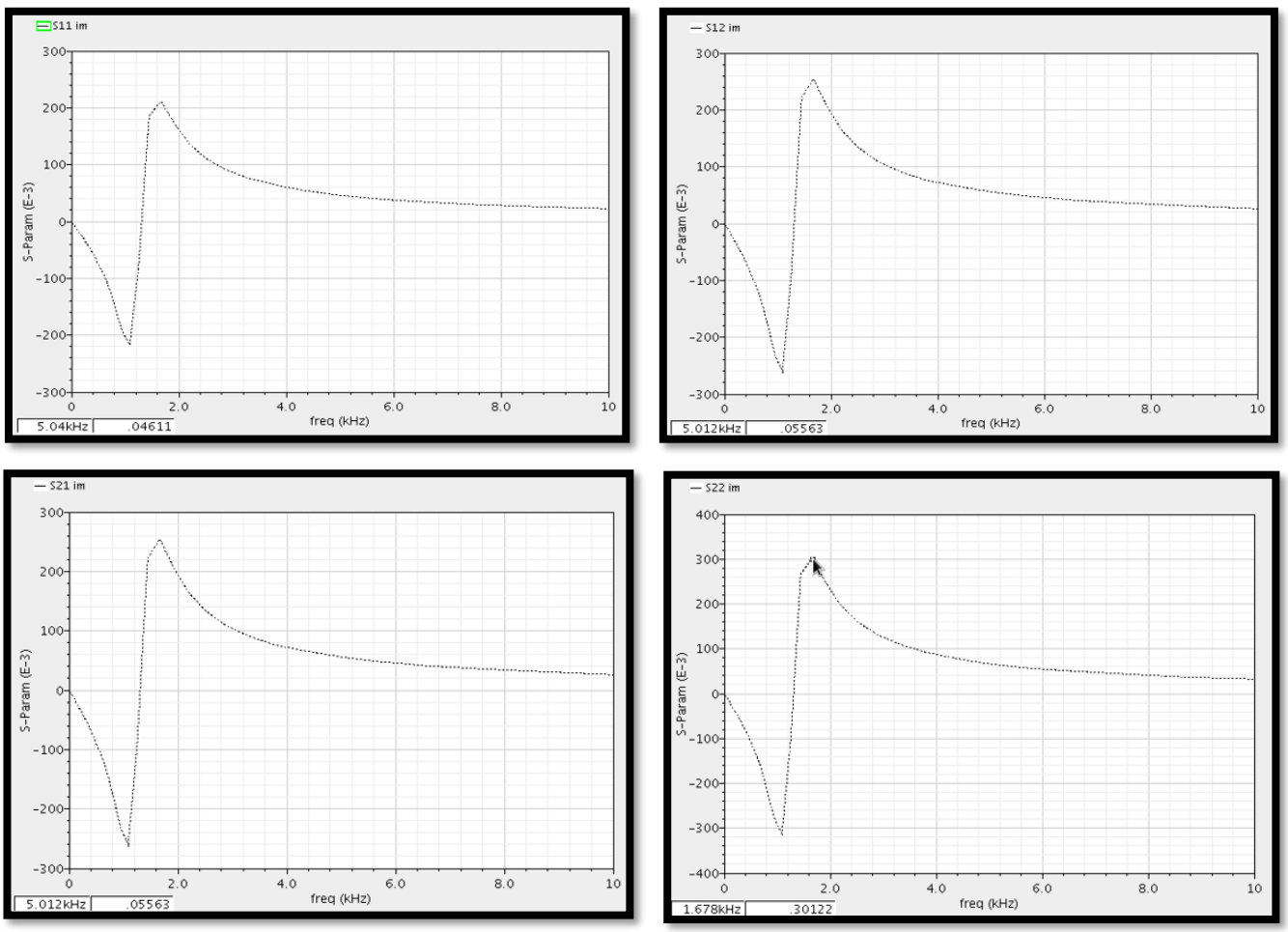

Figure 4.2: Simulation Results of Two-Port Network (Imaginary Analysis)

5. ADVANTAGES AND DISADVANTAGES

5.1 Advantages:-

1. **Accurate High-Frequency Analysis:** S-parameters provide detailed information about network performance.
2. **Non-Invasive Measurement:** The analysis can be performed without altering the circuit operation.
3. **Insightful Phase and Magnitude Analysis:** Real and imaginary components allow for complete understanding of signal behavior.
4. **Optimized Circuit Design:** Helps in designing impedance-matched networks to minimize reflection losses.
5. **Efficient Simulation:** Cadence Virtuoso enables precise and efficient computation of S-parameters.

5.2 Disadvantages:-

1. **Complex Interpretation:** Requires deep understanding of frequency-domain analysis.
2. **Limited to Linear Systems:** Not applicable for non-linear network behaviors.
3. **Software and Hardware Limitations:** Requires high computational resources for accurate simulation.
4. **Time-Consuming Setup:** Setting up simulations in Cadence Virtuoso can be complex and time-intensive.

6. CONCLUSION

The analysis of S-parameters, particularly their real and imaginary components, is essential for designing efficient two-port networks in high-frequency applications. By using Cadence Virtuoso, engineers can precisely simulate and analyze these parameters, enabling optimized circuit performance.

The real component of S-parameters represents the resistive behavior of the network, helping designers understand energy loss and power dissipation. Meanwhile, the imaginary component provides insights into reactive properties, crucial for managing phase shifts and ensuring proper signal transmission. Understanding both components allows engineers to fine-tune circuit parameters to achieve desired performance characteristics, such as minimized reflection, optimized impedance matching, and enhanced gain.

Cadence Virtuoso streamlines this analysis by offering a robust simulation environment where complex circuits can be tested before physical implementation. By leveraging its advanced modeling capabilities, designers can ensure their circuits function optimally across a range of frequencies, making S-parameter analysis a vital aspect of modern electronic circuit design.

In summary, S-parameter analysis using Cadence Virtuoso offers a powerful approach to studying and refining two-port networks. Despite some challenges, such as interpretation complexity and computational demands, the benefits far outweigh the limitations, making it an indispensable tool for RF and high-frequency circuit designers.

7. FREQUENTLY ASKED QUESTIONS (FAQs)

Q1. What are S-parameters?

Answer: S-parameters, or scattering parameters, define how electrical signals are reflected and transmitted through a network. They are widely used in RF and microwave engineering for network characterization.

Q2. Why analyze real and imaginary components of S-parameters?

Answer: The real part represents the resistive behavior, while the imaginary part indicates the reactive (capacitive or inductive) nature of the network. Together, they provide a complete picture of network performance.

Q3. Why use Cadence Virtuoso for S-parameter analysis?

Answer: Cadence Virtuoso offers an accurate and efficient platform for circuit simulation, enabling precise extraction and visualization of S-parameters for complex designs.

Q4. Can S-parameters be used for non-linear circuits?

Answer: No, S-parameters are primarily used for linear time-invariant (LTI) networks. Non-linear analysis requires different techniques like X-parameters or large-signal S-parameters.

Q5. How can I optimize my two-port network using S-parameters?

Answer: By analyzing the reflection (S11, S22) and transmission (S21, S12) parameters, designers can minimize return loss, enhance gain, and achieve impedance matching for improved circuit performance.